S

SCT C

SCT CONFIDENTIAL

SCT CONFIDEN

SC

S

SCT CONFIDENTIAL

SCT CONF

SCT C

SCT CONF

SCT C

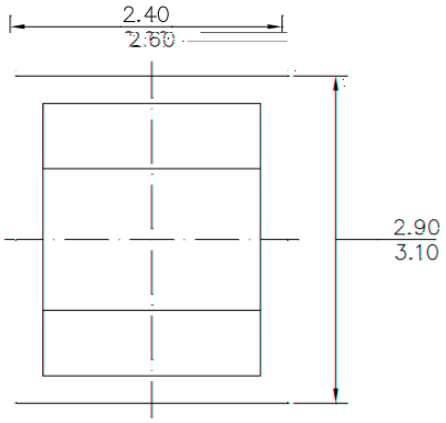

[redacted]

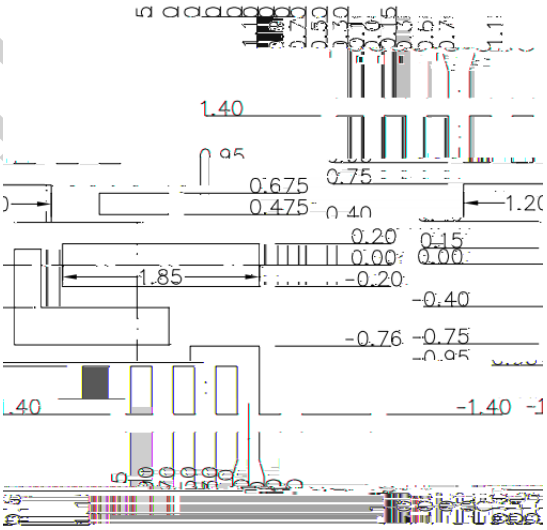

SCT CONFIDENTIAL