6 & 7 %

25'(5$%/('(9,&(	3$&.$*,1* 7<3(	67$1'$5' 3$&. 47<	3$&.$*(0$5.,1*	3,16	3$&.$*('(6&5,37,21

'(6&5,37,21	0,1	0$;	81,7

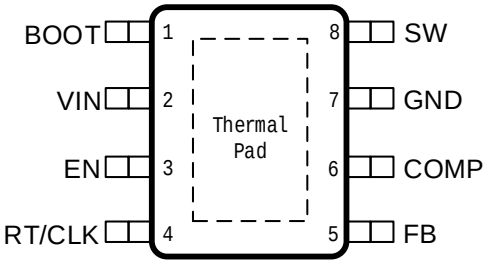

)LJXUH/HDG 3OD(6/23LF

6 & 7 %

)UHTXHQF\ 6SUHDG 6SHFWUXP

/LQH)DUHTXHQFG XFWLRQ

%RRWVWUDS 9ROWDJH 5'HJRXDWSRU DWLRQ RZ

7\SLFDO $SSOLFDWLRQ

)LJXUH6&7 %'HVLJQ ([DPSOH2XWSXW ZLWK 3URJUDPPDEOH 89/

'HVLJQ3DUDPHWHUV

'HVLJQ 3DUDPHWHUV	([DPSOH 9DOXH

, Q G X F W R U 6 H O H F W L R Q

=

$$_1 = \frac{1}{2^{\quad 7}} = \frac{}{2^{\quad 7}}$$

$$_2 = \frac{1}{2} = \frac{}{2}$$

x
x
x

$$f_{\ 1} = \frac{1}{2^{\quad 7 \quad 4}}$$

$$f_{\ 2} = \frac{1}{2}$$

,QYHUWLQJ 3RZHU DSSOLFDWLRQ

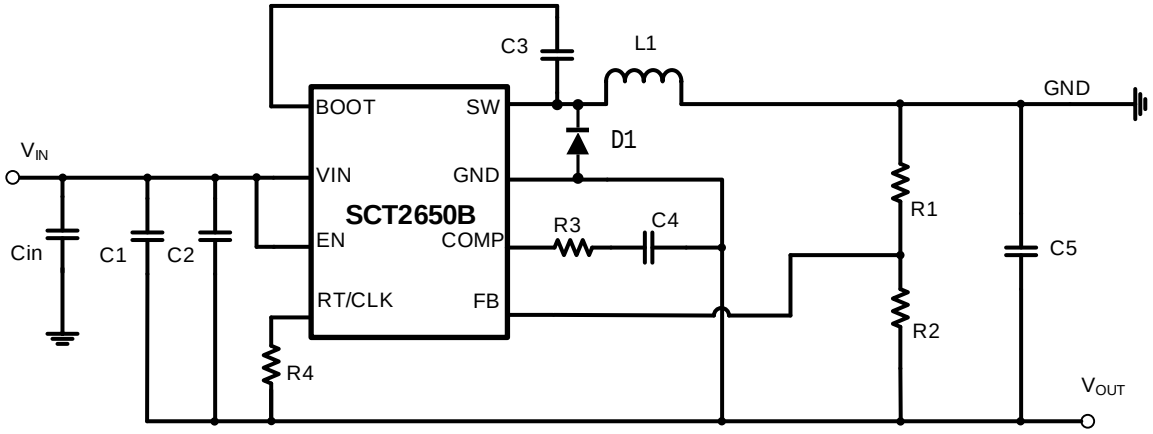

$SSOLFDWLRQ :DYHIRUPV

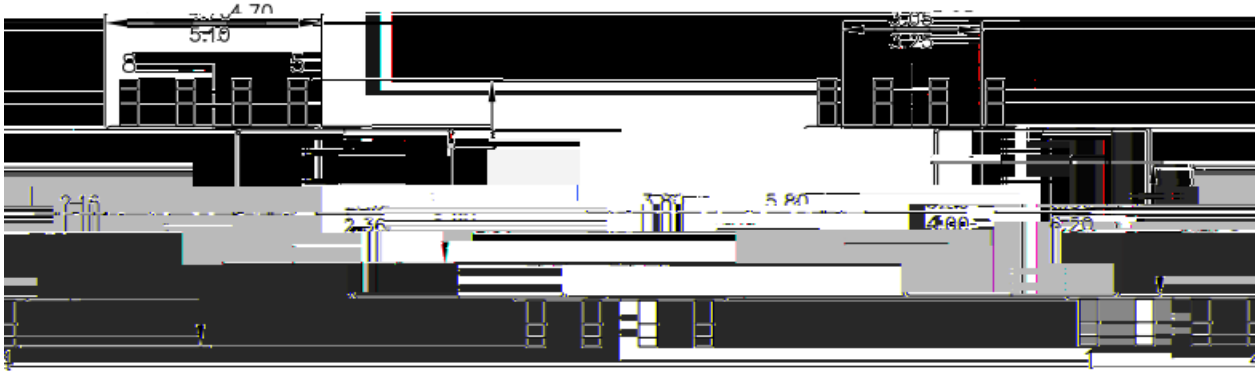

BOTTOM VIEW **TOP VIEW**

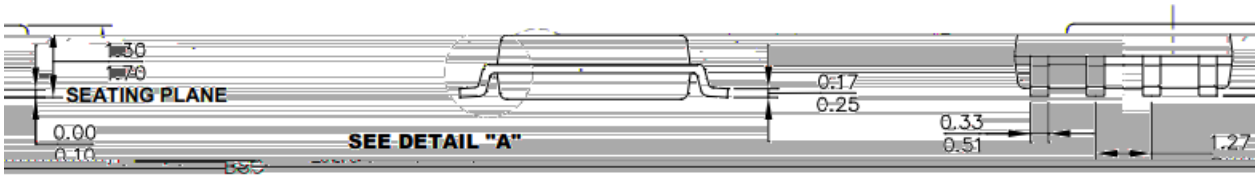

FRONT VIEW **SIDE VIEW**

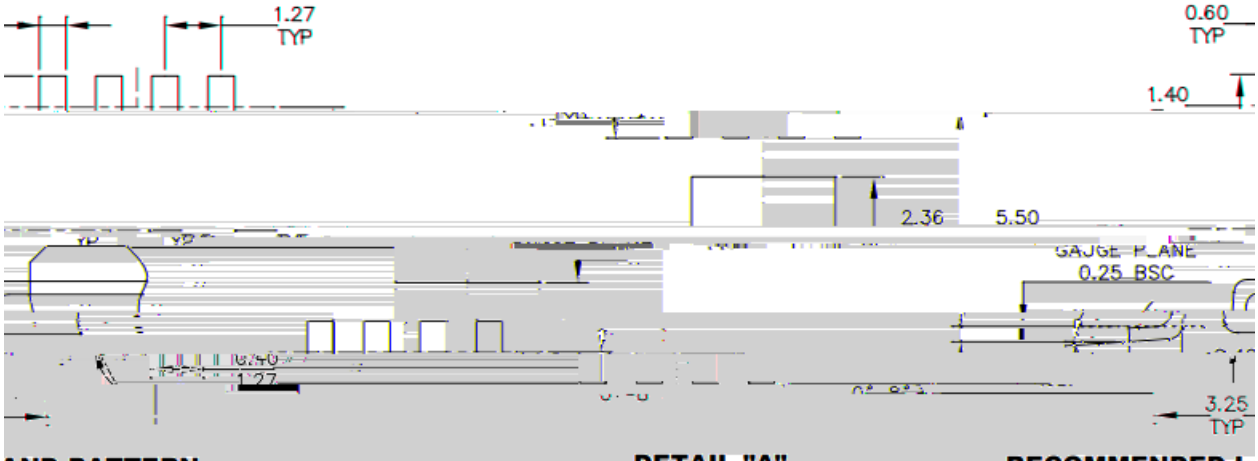

NOTE:

1 2 7 , & (